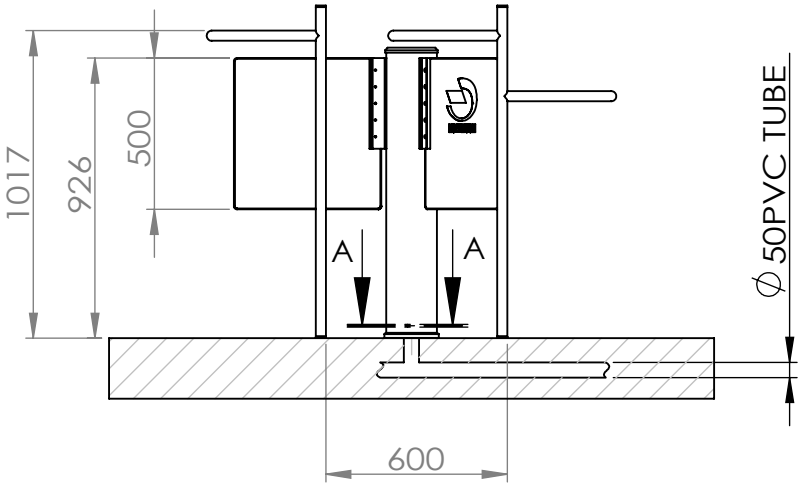

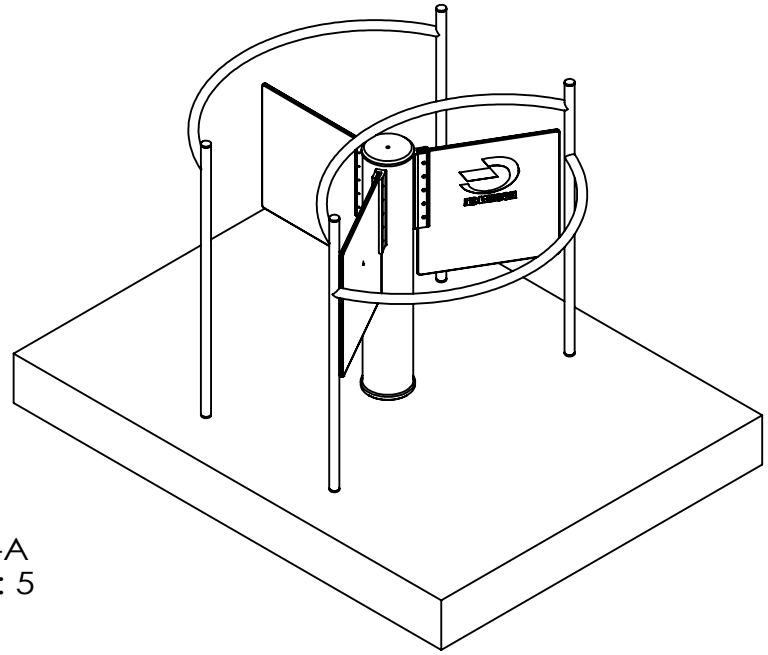

DETAIL A-A
SCALE 1 : 5

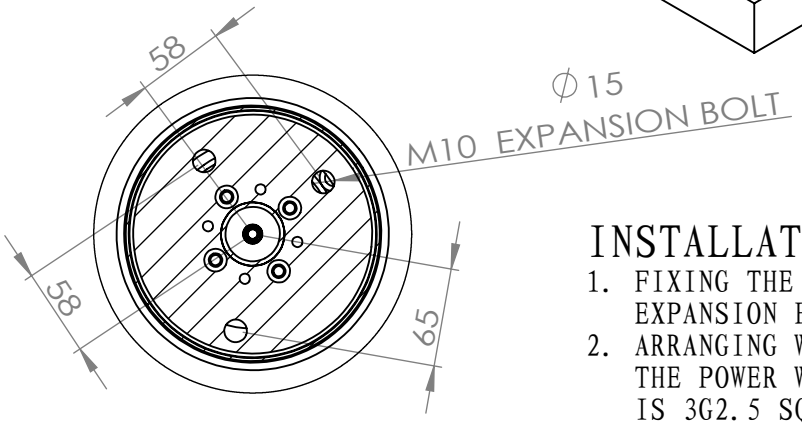

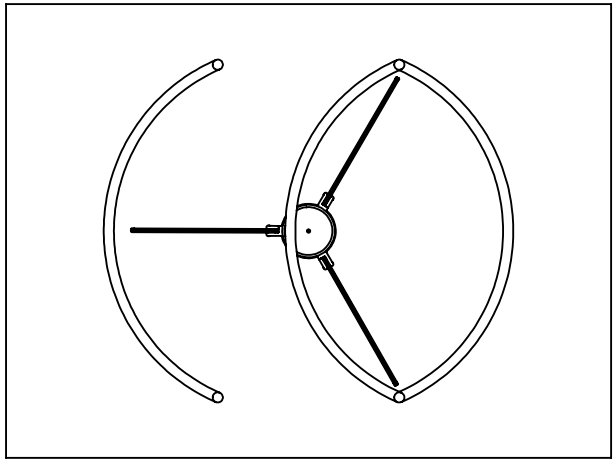

INSTALLATION:

1. FIXING THE EQUIPMENT WITH M10X80 EXPANSION BOLT
2. ARRANGING WIRES WITH∅50PVC TUBE; THE POWER WIRE FOR THE EQUIPMENT IS 3G2.5 SQUARE

EXPANSION BOLT IS INSTALLED IN ELLIPSE TO FIX THE EQUIPMENT，AND CONTROL LINE AND POWER LINE ARE IMPORTED FROM ∅50PVC

REVISION MARK	NUMBER OF REVISION	SIGNATURE	DATE
DESIGNED			
DRAWN			
CHECKED			
STANDARDIZATION			
APPROVED			

TITLE:

MATERIALS:

VERSION	NUMBERS	SCALE	TOTAL: PAGE
			PAGE:

DWG. NO.:

PROJECTIVE MARK | FINISH

SHENZHEN ESSENCE INFORMATION TECHNOLOGY CO.,LTD